California Polytechnic State University Pomona
DEPARTMENT OF ELECTRICAL & COMPUTER ENGINEERING

Digital Logic Design Laboratory

ECE 2300L

Report #9 Experiment 12

Pulse Generator

Prepared by

Kevyn Santos & Yanming Feng

Presented to

Dr. Yazdy R Mostafa

December 7, 2023

Introduction:

In this lab we will be utilizing a function generator to build a circuit that will display 0, 1, 2, 4, 5, 6, & 7. It will skip over the numbers not stated.

Prelab:

1.

a.

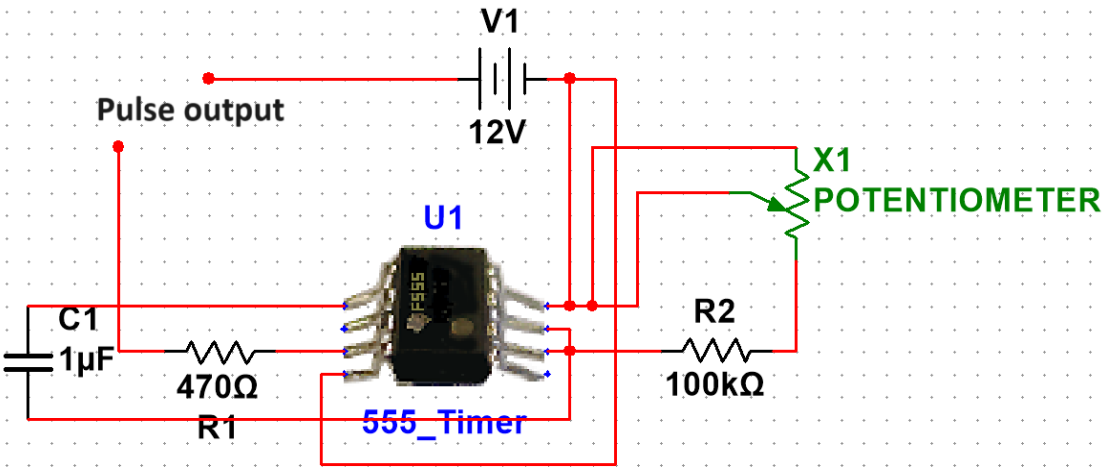

b.

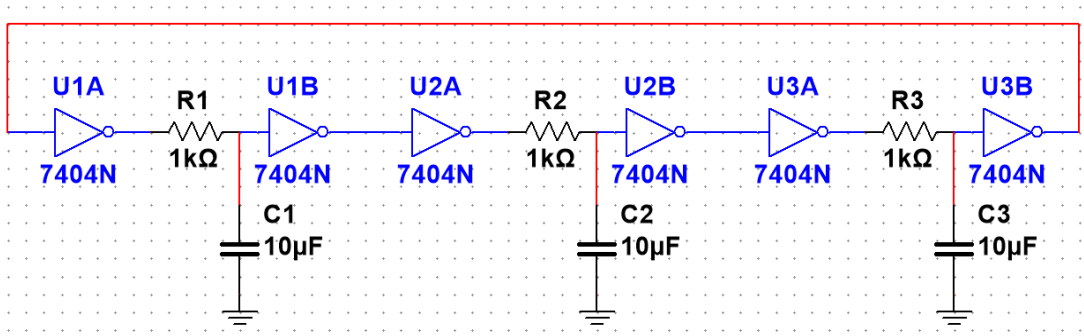

2.

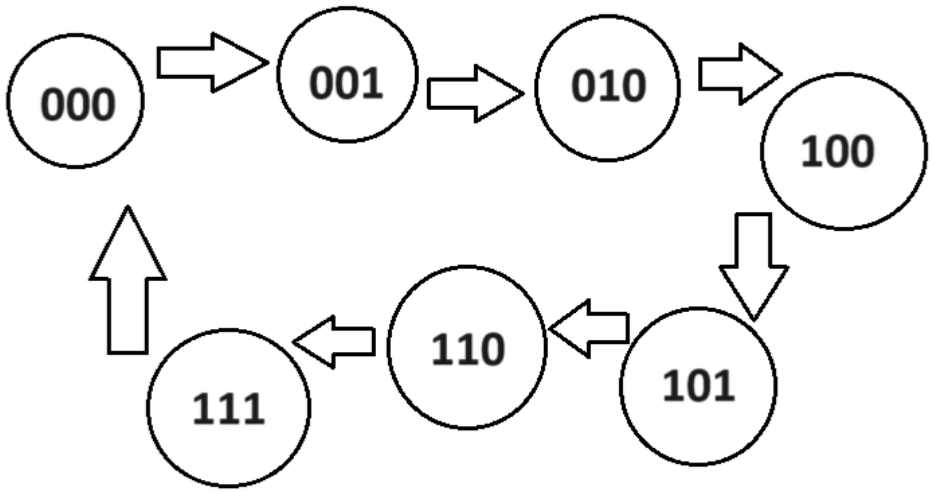

Q	Q+	T
0	0	0
0	1	1
1	0	1
1	1	0

Q2Q1Q0	Q2+ Q1+Q0+	T2T1T0
000	001	001
001	010	011
010	100	110
011	000	011
100	101	001
101	110	011
110	111	001
111	000	111

Q2 \ Q1 Q0	00	01	11	10
0				1
1			1	

T2 = Q2Q1Q0 + Q2'Q1Q0'

Q2 \ Q1 Q0	00	01	11	10
0		1	1	1
1		1	1	

T1 = Q0 + Q2'Q1

Q2 \ Q1 Q0	00	01	11	10
0	1	1	1	
1	1	1	1	1

T0 = Q2 + Q1' + Q0

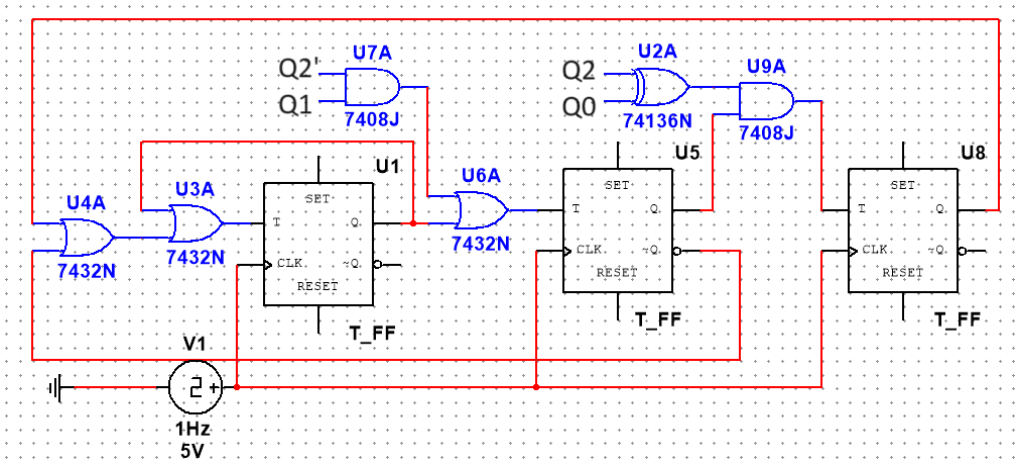

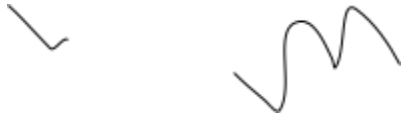

Experiment:

In figure 1, our 7 segment display shows a 0 which is the first state

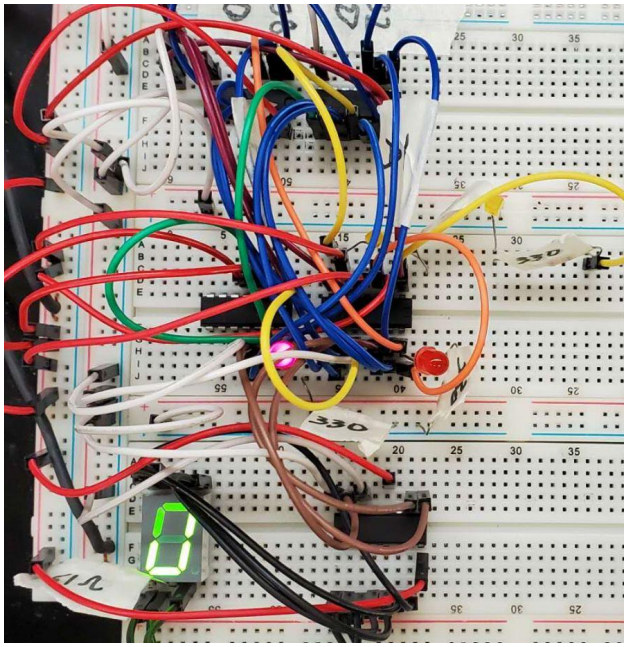

In figure 2, our 7 segment display shows a 1 which is the second state

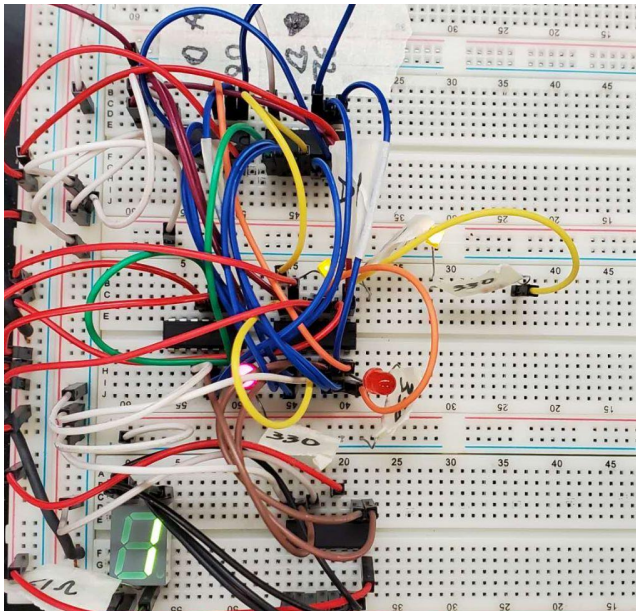

In figure 3, our 7 segment display shows a 2 which is the third state

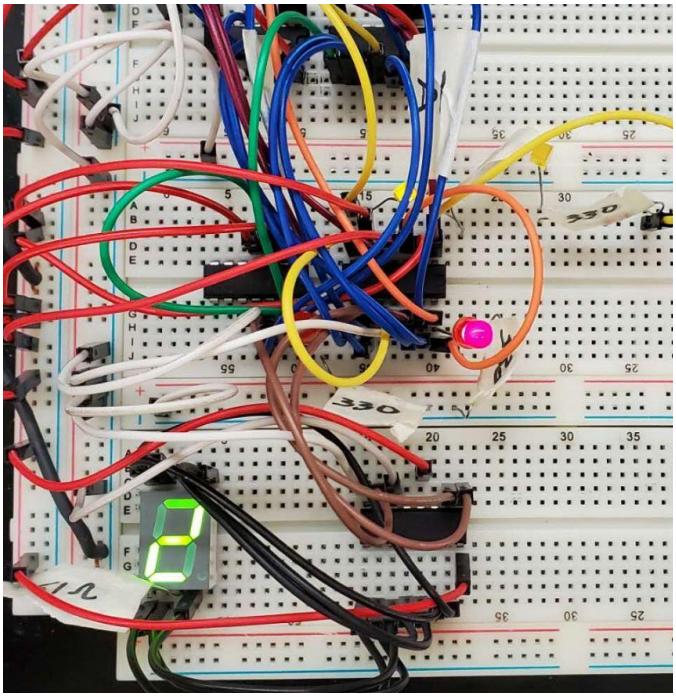

In figure 4, our 7 segment display shows a 4 which is the fourth state

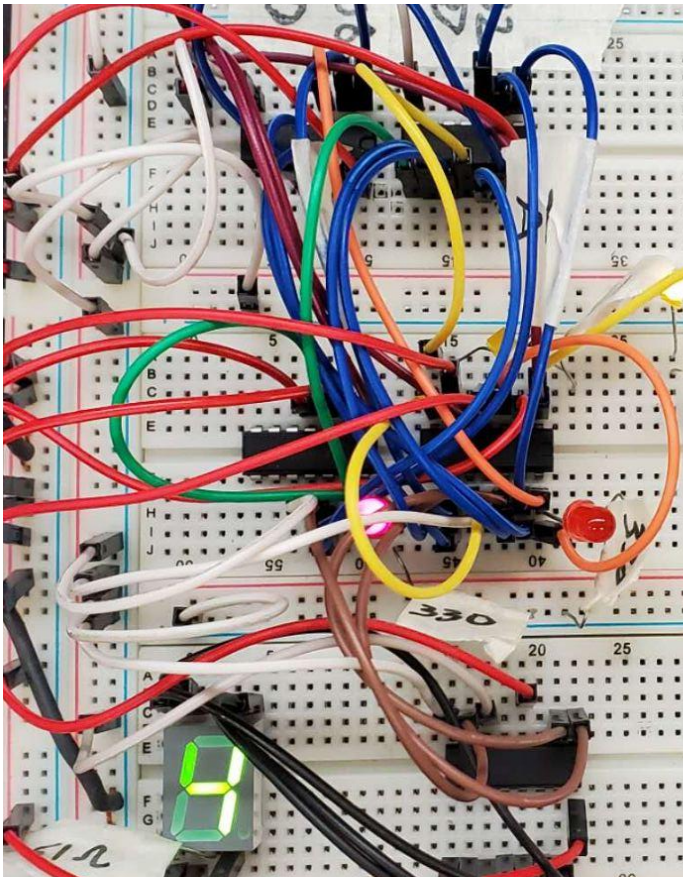

In figure 5, our 7 segment display shows a 5 which is the fifth state

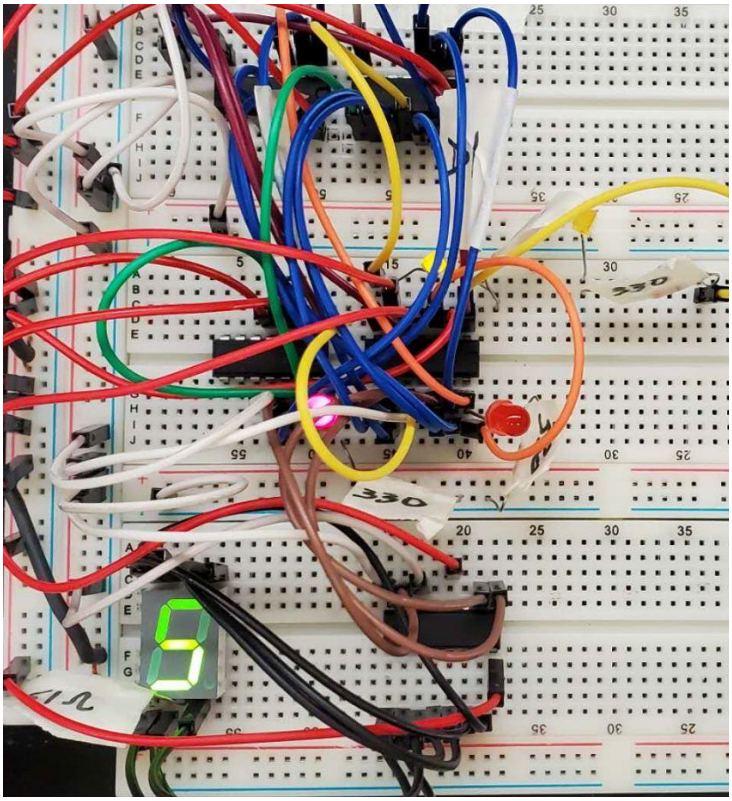

In figure 6, our 7 segment display shows a 6 which is the sixth state

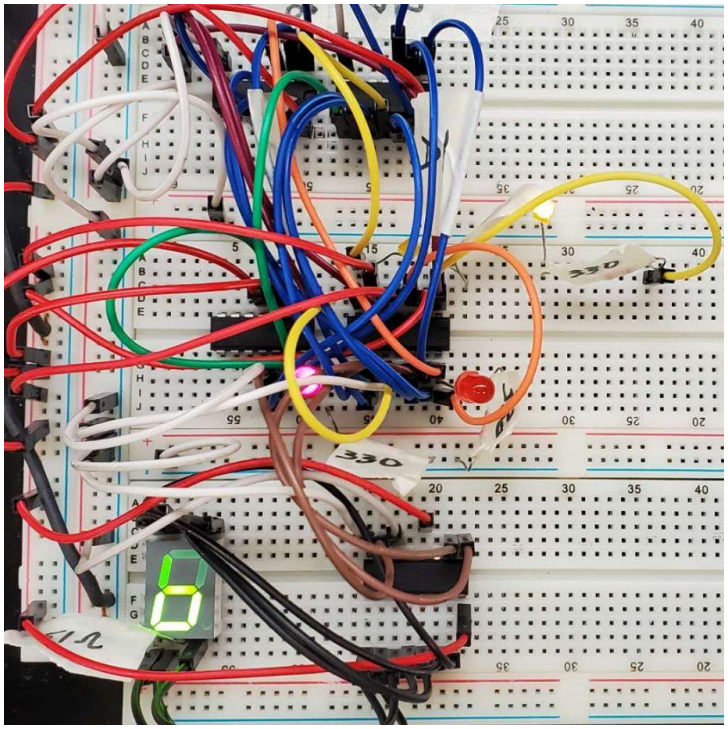

In figure 7, our 7 segment display shows a 7 which is the final state

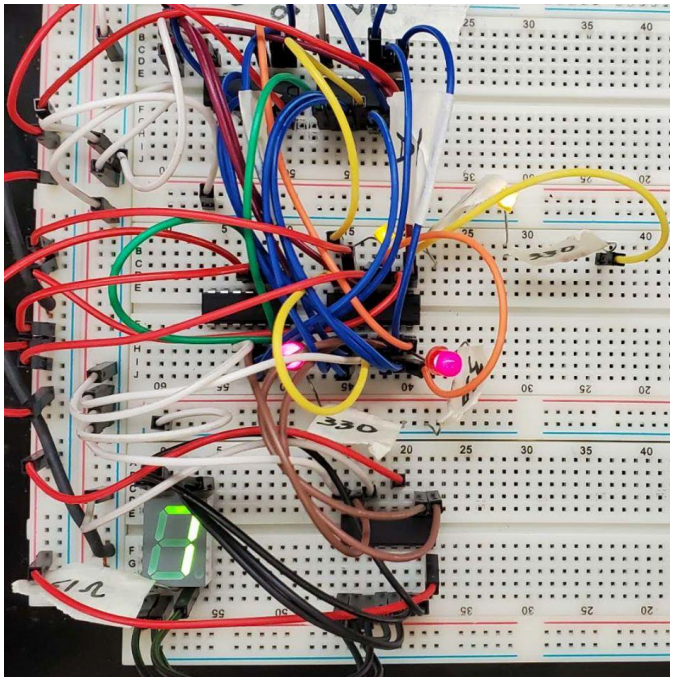

Post-Lab:

1. We will need a minimum of 4 flip flops. One flip flop only counts up to 1, two flip flops counts up to 3, three flip flops counts up to 7, & four flips count up to 15. Since we need to count to 14 then restart, 4 flip flops is the minimum number we need to use for our circuit.

Conclusion:
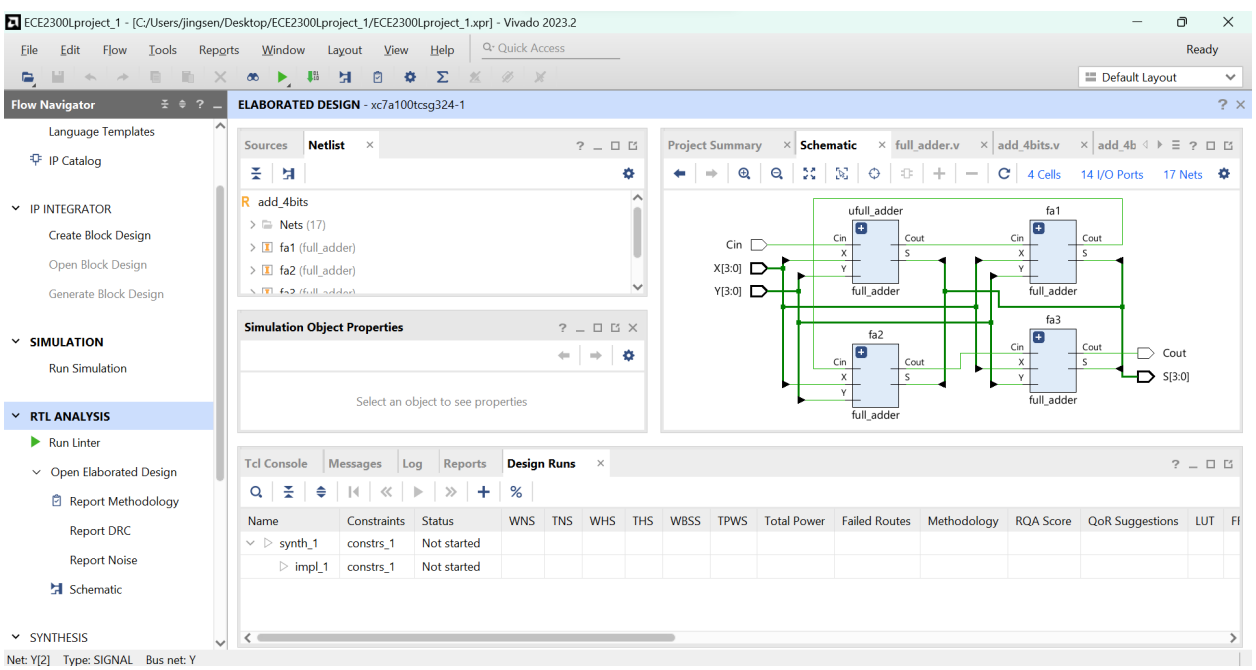
Throughout this lab, we applied our expertise in constructing truth tables, Karnaugh maps, state tables, and diagrams to deploy flip-flops within our counter. The successful omission of the digits 3, 8, and 9 affirmed its functionality, as it didn't self-adjust but rather skipped these values as intended. Our experience extended to implementing and crafting pulse generators, providing valuable hands-on practice with flip-flops. This experiment proved highly informative, demanding critical thinking to ensure its seamless operation, thus offering us a rich learning experience.